One Technology Way • P.O. Box 9106 • Norwood, MA 02062-9106, U.S.A. • Tel: 781.329.4700 • Fax: 781.461.3113 • www.analog.com

SOFTWARE NOTE

Updating USB-IIC Dongle Driver

INTRODUCTION

The USB-SMBUS-CABLEZ and USB-5PSMBUS-CABLEZ dongles are used by several Analog Devices software tools to provide an I2C port that can communicate with various evaluation boards and devices. These dongles plug into a USB port on a PC and provide either a 3- or 5-pin header that plugs into an evaluation board to give I2C and in the case of the USB-5PSMBUS-CABLEZ two digital I/O signals as well.

In order for the dongle hardware to be recognized by the evaluation software a set of driver files is installed on the PC. This is usually done as part of the evaluation software install. When the user plugs the dongle in for the first time, the operating system detects that new hardware is connected, and prompts the user to select the appropriate drivers from a list.

In order to provide more reliable and robust software support on the most recent versions of the Microsoft Windows operating system the driver files used to support the USB-SMBUS-CABLEZ and USB-5PSMBUS-CABLEZ dongles are changing with the latest releases of the evaluation software. The following versions of the software all adopt the new driver scheme:

- ADM1062-69 Tool v4.1.0
- ADM1175-78 & ADM1191-92 Tool v 3.1.0
- ADM1275 Tool v1.0

These versions of the tools and all later versions use the upgraded USB Dongle driver

WHO NEEDS TO UPGRADE?

Unless you have a need to run the ADM1275 evaluation software, then there is no need to upgrade the USB dongle drivers currently. The ADM1062-69 Tool v4.1.0 and ADM1175-78 & ADM1191-92 Tool v 3.1.0 provide no new features or bug fixes; they exist only to provide versions of the respective tools that are compatible with the new dongle driver.

However, all future versions of these tools will all use this new driver. This means that as new versions of the tools are released with additional features and/or bug fixes that the user requires there will be a need to upgrade at some point in the future.

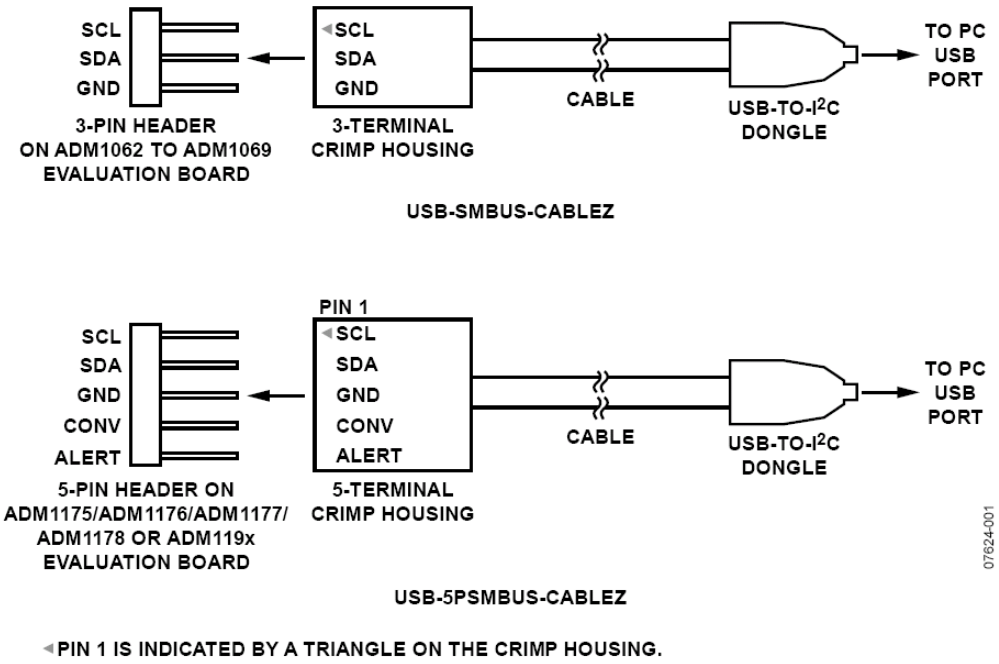

Figure 1. Examples of the USB-to-I²C Dongle Cable Connections

TABLE OF CONTENTS

UPGRADE PROCEDURE

The recommended sequence of steps to upgrade the USB Dongle driver is as follows:

1. Ensure all USB-SMBUS-CABLEZ and USB-SMBUS-CABLEZ are unplugged from the PC
2. Uninstall all previous versions of the ADM1062-69 and /or ADM1175-78 & ADM1191-92 evaluation software
3. Open the '`C:\WINDOWS\inf`' directory. Delete the following files if they exist: '`adiusbitf.inf`', '`adiusbitf.pnf`', '`adiusbpsm.inf`' and '`adiusbpsm.pnf`'. The uninstall should remove the two 'inf' files, so they may not be present. The 'inf' files are install files for the old driver. The 'pnf' versions are compiled by the operating system when the dongle is plugged in.
4. Run the ADMxxxx Run-time Installer. This puts on the new version of the dongle driver along with a common run-time engine that is used by all the ADMxxxx software tools. As such it only needs to be installed once to support one or more of the tools.
5. Plug in a dongle. The operation system should detect a device has been plugged in and start the 'Found New Hardware Wizard'. Select the option to allow the hardware wizard to automatically locate the correct driver software. If more than one suitable driver is found a list will be displayed, select the "USB-IIC Converter' option from the list. However, this should only happen if the the inf and pnf files listed above have not been removed.
6. The wizard should report the hardware was correctly installed. At this point, the evaluation software can be run.

Important Note

The beta version of ADM1062-69 Tool v4.1.0 fully supports the new driver when used with the USB-SMBUS-CABLEZ. However, it does not yet support the direct USB cable connection to the ADM106XEB main evaluation board.

If you need to install the ADM1275 software, and also need to use the main evaluation board at this time do no uninstall the existing ADM1062-69 evaluation software in step 2, and do not delete the following files '`adiusbitf.inf`' and '`adiusbitf.pnf`' in step 3 above.

TROUBLESHOOTING

If there is a problem with the hardware wizard launch the 'Device Manager' to investigate. A quick way to do this is to go into the Start Menu, select the 'Run…' option and enter 'devmgmt.msc'.

In the list of devices, look for one that has a small yellow exclamation mark on it. This will either be in the 'Universal Serial Bus Controllers' section or the 'NI-VISA USB Devices' section.

Right-click on the entry, and select 'Update Driver'. This will launch the 'Hardware Update Wizard'. Select the option to try to install the software automatically.

If this fails, select 'Update Driver' again, but this time select the option to manually select the correct driver. The driver file is '`USB-IIC Converter.inf`' and it is installed in '`C:\WINDOWS\inf`' by the ADMxxxx run-time install software.

NOTES

©2010 Analog Devices, Inc. All rights reserved. Trademarks and registered trademarks are the property of their respective owners.
ANxxx-x-x/xx(x)